MVHA-31* series

HAND **VALVE**

mindman

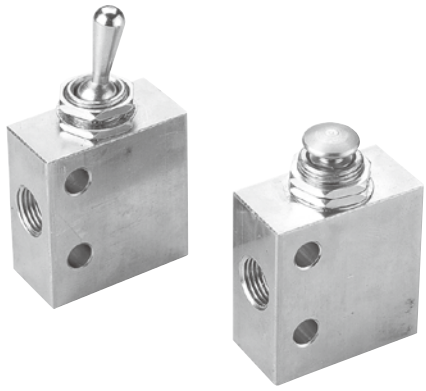

Specification

Model	MVHA-31V	MVHA-31P
Bore No.	6A	
Port size	Rc1/8	
No. of port	3	
No.of position	2	
Medium	Air	
Operating pressure range	0~0.9 MPa	
Effective orifice	4.5 mm^2	
Ambient temperature	-5~+60°C (No freezing)	
Weight	53 g	50 g

Order example

MVHA — 31V — G

- MODEL
- **3**: 3way (3 port)
- **V**: V toggle
  P: Push button
- PORT THREAD
  Blank: Rc thread
  G: G thread
  NPT: NPT thread

MVHA-31V

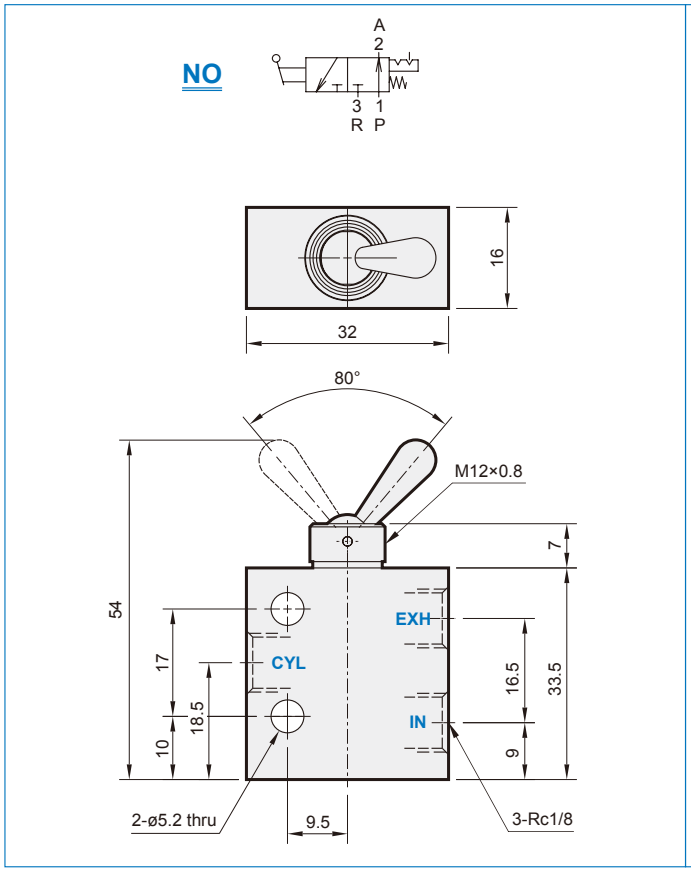
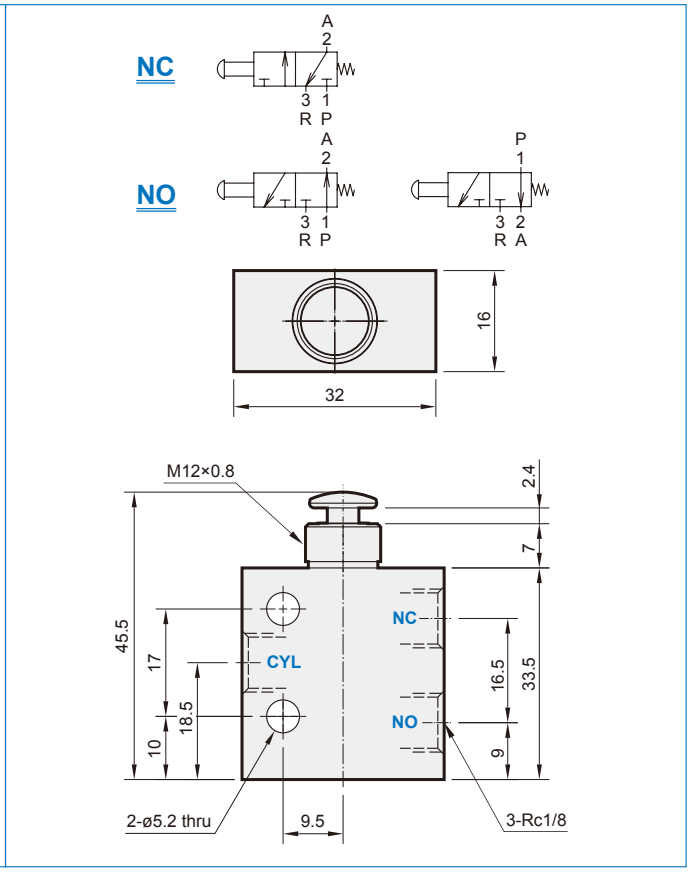
MVHA-31P